CANTILEVER SMALL

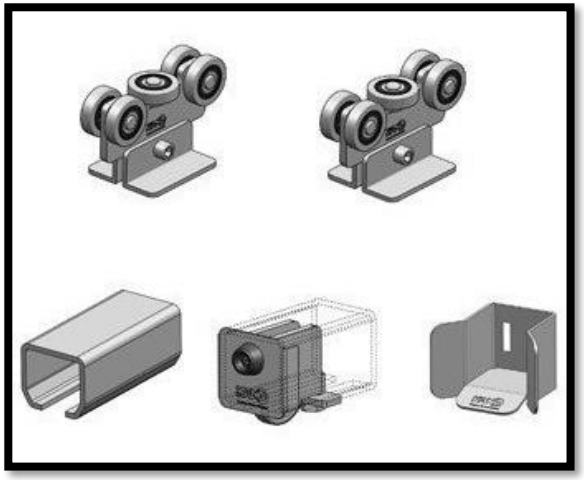

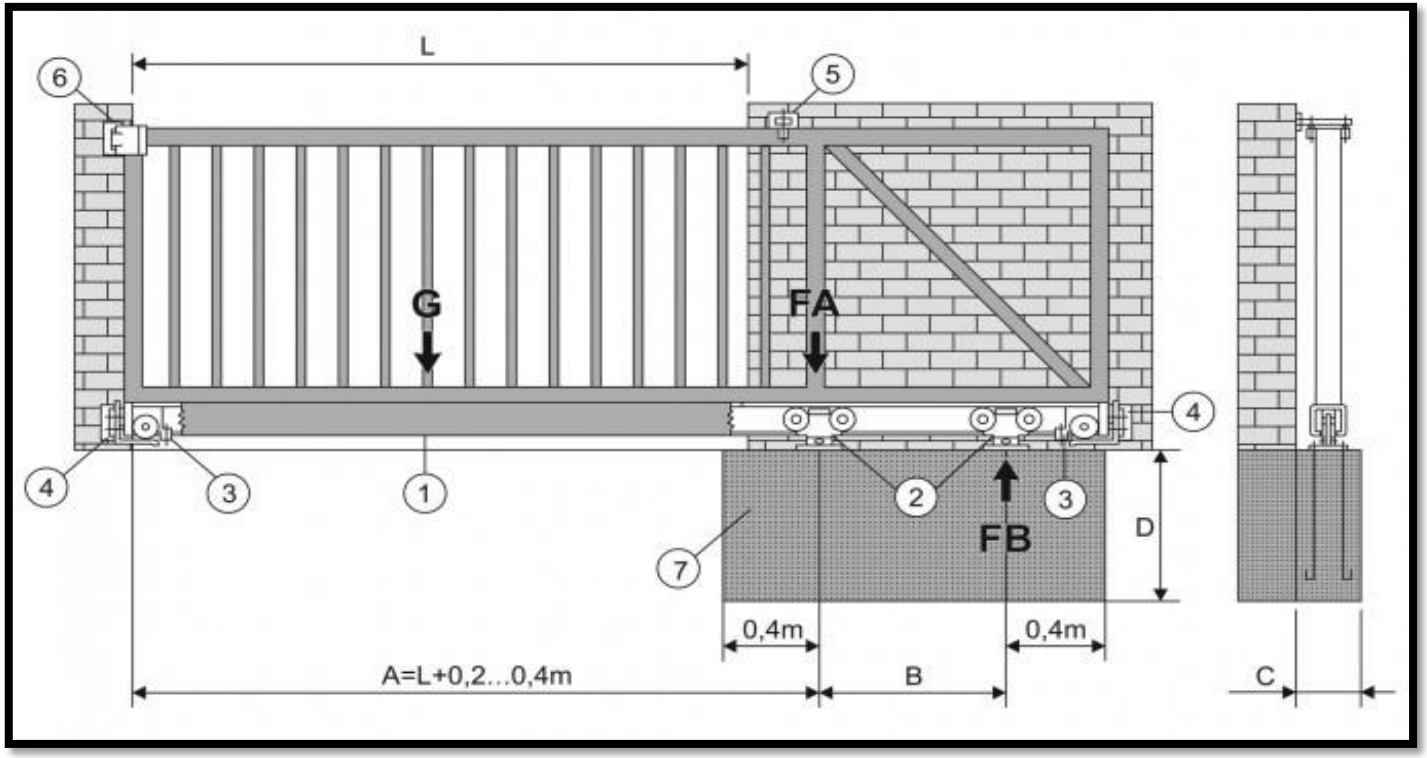

Small skit:

2 x rolice,

1 x nasjedni kotač,

1 x prihvat,

1 x vodilica 6m

KIT 48						
COD	L	A max	B min	B opt	G max	D min
KIT 48	2,6m	3m	1,4m	1,8m	220 kg	0,80m
	3m	3,4m	1,5m	1,9m	200 kg	0,80m
	3,5m	3,9m	1,6m	2,0m	180 kg	0,80m
	4,1m	4,5m	1,7m	2,1m	160 kg	0,80m
	5m	5,4m	1,8m	2,2m	140 kg	0,80m

www.torautomatic.hr

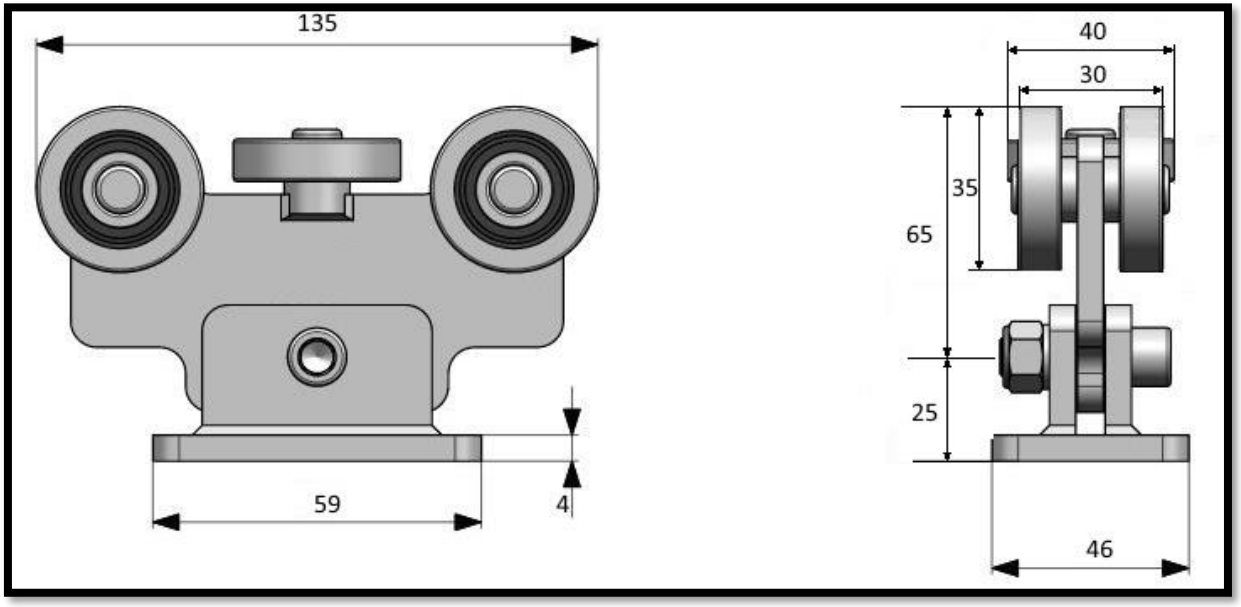

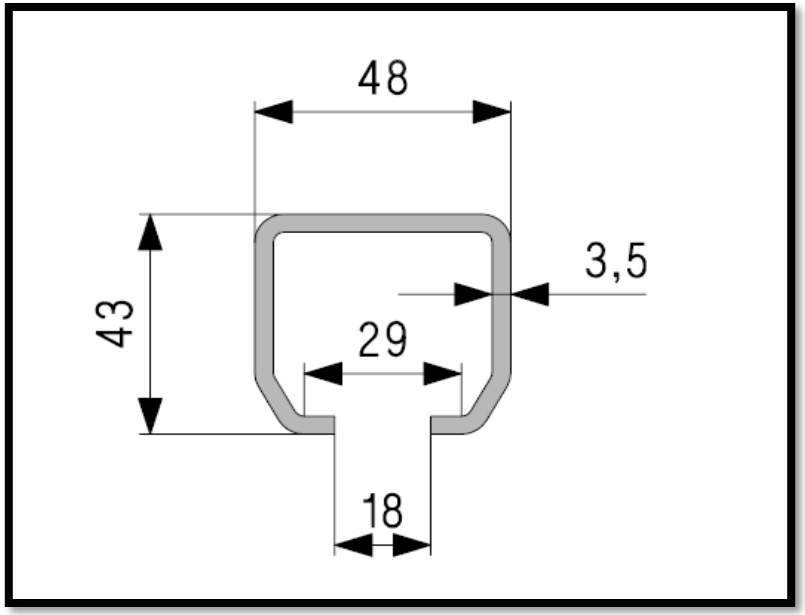

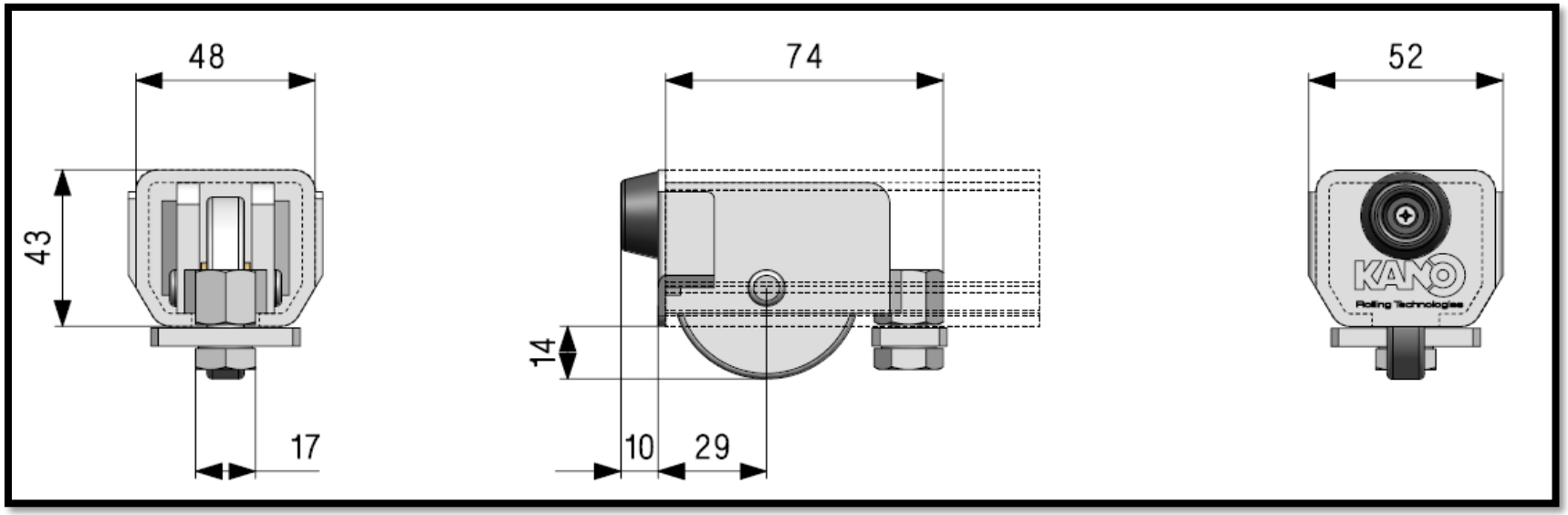

www.torautomatic.hr